Product information

Radar

Level measurement in bulk solids

VEGAPULS 67
VEGAPULS SR 68
VEGAPULS 68
VEGAPULS 69

Document ID: 29427

Contents

1 Measuring principle 3
2 Type overview 4
3 Instrument selection 6
4 Selection criteria 7
5 Housing overview 8
6 Mounting 9
7 Electronics - 4 … 20 mA/HART - two-wire 11
8 Electronics - 4 … 20 mA/HART - four-wire 12
9 Electronics - Profibus PA 13
10 Electronics - Foundation Fieldbus 14
11 Electronics - Modbus, Levelmaster protocol 15
12 Adjustment 16
13 Dimensions 18

Take note of safety instructions for Ex applications

Please note the Ex specific safety information that you can find at www.vega.com and that comes with each instrument. In hazardous areas you should take note of the appropriate regulations, conformity and type approval certificates of the sensors and power supply units. The sensors must only be operated on intrinsically safe circuits. The permissible electrical values are stated in the certificate.

29427-EN-180201

1 Measuring principle

Measuring principle VEGAPULS 67, SR 68, 68

Extremely short microwave pulses are emitted by the antenna system in the direction of the measured product, reflected by the product surface and received back again by the antenna system. They propagate at the speed of light. The time from emission to reception of the signals is proportional to the level in the vessel.

A special time stretching procedure allows reliable and precise measurement of the extremely short times.

The VEGAPULS 67, SR 68, 68 radar sensors work with low emitted power in the K-band frequency range.

Measuring principle VEGAPULS 69

The instrument emits a continuous radar signal via its lens-shaped antenna. This signal is frequency modulated with a sawtooth form. The emitted signal is reflected by the medium and received by the antenna as echo.

The frequency of the received signal always deviates from the actual emitted frequency. The frequency difference is calculated by special algorithms in the sensor electronics. It is proportional to the level in the vessel.

The VEGAPULS 69 operates with low emitted power in the W-band frequency range.

Optimized for bulk solids

Due to the very good signal focussing, internal silo installations or buildup on the vessel wall do not influence the measurement. A high sensitivity electronics adapted to the requirements of bulk solids measurement enables reliable level measurement of different products up to 120 m. The measuring principle is unaffected by strong dust generation, filling noise, air flow due to pneumatic filling and temperature fluctuations.

Advantages

Non-contact radar technology is characterized by extremely high accuracy. The measurement is influenced neither by fluctuating product features nor by changing process conditions such as temperature, pressure or strong dust generation. The user-friendly adjustment without vessel filling and emptying saves time.

Input variable

The measured variable is the distance between the process fitting of the sensor and the product surface. The reference plane is the seal surface of the flange.

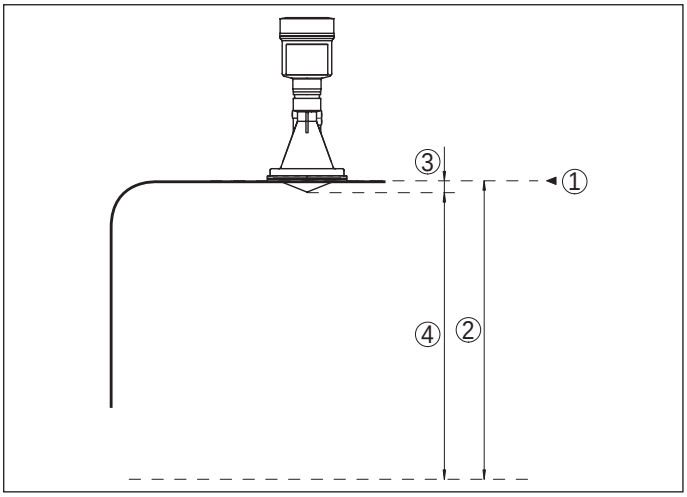

Fig. 1: Data of the input variable

1 *Reference plane*
2 *Measured variable, max. measuring range*
3 *Antenna length*
4 *Utilisable measuring range*

2 Type overview

	VEGAPULS 67	VEGAPULS SR 68	VEGAPULS 68
Applications	Bulk solids	Bulk solids under extremely difficult process conditions	Bulk solids under extremely difficult process conditions
Max. measuring range	15 m (49.21 ft)	30 m (98.43 ft)	75 m (246.1 ft)
Antenna/Material	Completely encapsulated plastic horn antenna/PP	Horn or parabolic antenna/316L	Horn or parabolic antenna/316L
Process fitting/Material	Mounting strap/316L or flange/PP	Thread G1½/316L according to DIN 3852-A or flange/316L	Thread G1½/316L according to DIN 3852-A or flange/316L
Process temperature	-40 … +80 °C (-40 … +176 °F)	-40 … +250 °C (-40 … +482 °F)	-196 … +450 °C (-321 … +842 °F)
Process pressure	-1 … +2 bar/-100 … +200 kPa (-14.5 … +29.0 psig)	-1 … +100 bar/-100 … +10000 kPa (-14.5 … +1450 psi)	-1 … +160 bar/-100 … +16000 kPa (-14.5 … +2320 psi)
Deviation	≤ 2 mm	≤ 2 mm	≤ 2 mm
Frequency range	K-band	K-band	K-band
Signal output	● 4 … 20 mA/HART - two-wire ● 4 … 20 mA/HART - four-wire ● Profibus PA ● Foundation Fieldbus ● Modbus, Levelmaster protocol	● 4 … 20 mA/HART - two-wire ● 4 … 20 mA/HART - four-wire ● Profibus PA ● Foundation Fieldbus ● Modbus, Levelmaster protocol	● 4 … 20 mA/HART - two-wire ● 4 … 20 mA/HART - four-wire ● Profibus PA ● Foundation Fieldbus ● Modbus, Levelmaster protocol
Indication/Adjustment	● PLICSCOM ● PACTware ● VEGADIS 81 ● VEGADIS 82	● PLICSCOM ● PACTware ● VEGADIS 81 ● VEGADIS 82	● PLICSCOM ● PACTware ● VEGADIS 81 ● VEGADIS 82
Approvals	● ATEX ● IEC ● FM ● CSA	● ATEX ● IEC ● Shipbuilding ● FM ● CSA	● ATEX ● IEC ● Shipbuilding ● FM ● CSA

VEGAPULS 69

Applications	Bulk solids under extremely difficult process conditions
Max. measuring range	120 m (393.7 ft)
Antenna/Material	Horn antenna/PP/PTFE, lens antenna/ PEEK, integrated horn antenna/PEEK
Process fitting/Material	Mounting strap/316L, flange/PP, flange/316L, thread 316L or Alloy C 22
Process temperature	-40 … +200 °C (-40 … +392 °F)
Process pressure	-1 … 20 bar/-100 … 2000 kPa (-14.5 … 290.1 psig)
Deviation	≤ 5 mm
Frequency range	W-band
Signal output	● 4 … 20 mA/HART - two-wire ● 4 … 20 mA/HART - four-wire ● Profibus PA ● Foundation Fieldbus ● Modbus, Levelmaster protocol
Indication/Adjustment	● PLICSCOM ● PACTware ● VEGADIS 81 ● VEGADIS 82
Approvals	● ATEX ● IEC ● FM ● CSA

3 Instrument selection

Application areas

VEGAPULS 67
The VEGAPULS 67 is a sensor for continuous level measurement of bulk solids under simple process conditions. It is suitable for smaller silos and vessels. The VEGAPULS 67 is an economical solution through its versatile and simple mounting options. The encapsulated antenna system ensures maintenance-free permanent operation even with strong contamination.

VEGAPULS SR 68
The VEGAPULS SR 68 is a sensor for continuous measurement of bulk solids even under difficult process conditions. It is particularly suitable for level measurement in high silos and large bunkers. The VEGAPULS SR 68 is an economical solution thanks to the simple setup and the reliable, maintenance-free operation.

VEGAPULS 68
The VEGAPULS 68 is a sensor for continuous measurement of bulk solids also under difficult process conditions and large measuring ranges. The sensor is ideal for level measurement in high silos, large bunkers, stone crushers and in the furnace. The VEGAPULS 68 with different antenna versions and materials is the optimum solution for virtually all applications and processes. Through the wide temperature and pressure range, the sensor can be used universally and enables a simple planning.

VEGAPULS 69
The VEGAPULS 69 is a sensor for continuous measurement of bulk solids under different process conditions. The sensor is ideal for level measurement in very high silos, large bunkers and segmented vessels. The very good signal focussing ensures a simple setup and a reliable measurement. The VEGAPULS 69 can be equipped with an encapsulated plastic antenna or a lens antenna integrated in the metal flange. This allows optimumg adaptation to different application areas.

Applications

Measurement with flange mounting
For mounting VEGAPULS 67 on a socket, an appropriate compression flange for DN 80 (ASME 3" or JIS 80) as well as a suitable adapter flange are available.

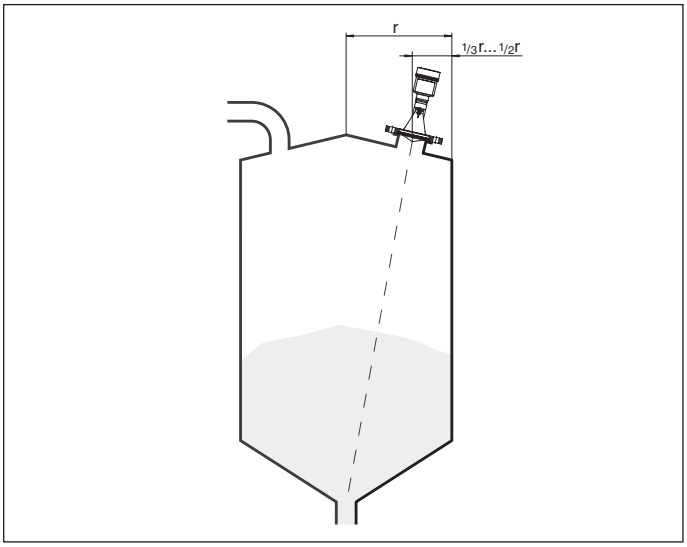

Fig. 6: Flange mounting of VEGAPULS 67

Measurement setups with mounting strap
The mounting strap enables simple mounting on the vessel wall or silo top. It is suitable for wall, ceiling or boom mounting. Especially in open vessels this is a very easy and effective way to align the sensor to the bulk solid surface.

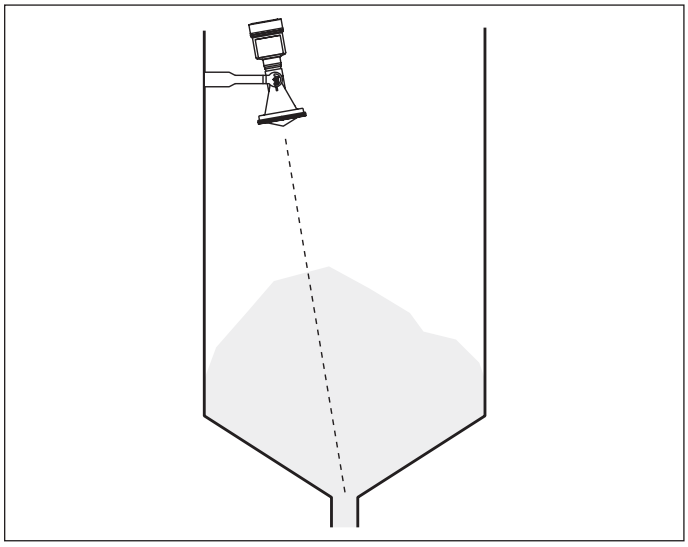

Fig. 7: VEGAPULS 67 with mounting strap

Measurement with swivelling holder
If mounting in the centre of the silo is not possible, the sensor can be directed to the vessel center by using the optional swivelling holder. The following illustration shows a simple way to determine the required angle of inclination.

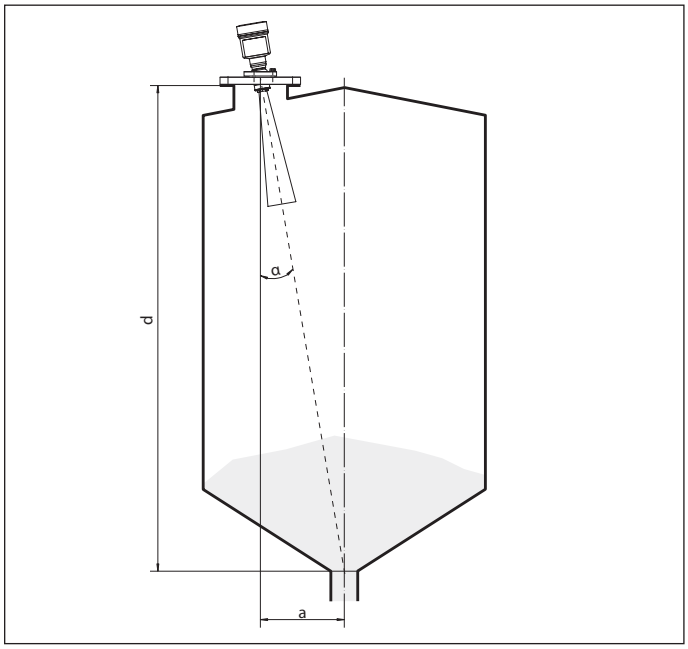

Fig. 8: VEGAPULS SR 68 or VEGAPULS 68 with swivelling holder

4 Selection criteria

		VEGAPULS 67	VEGAPULS SR 68	VEGAPULS 68	VEGAPULS 69
Vessel	Small to medium-size vessels	●	●	●	●
	Medium-size to large vessels	–	●	●	●
	Large vessel	–	–	●	●
	Very large vessels	–	–	●	●
Process	Simple process conditions	●	●	●	●
	Extremely difficult process conditions	–	●	●	–
Installation	Threaded fittings	–	●	●	-
	Flange connections	●	●	●	●
	Mounting strap	●	–	–	●
Antenna	Swivelling holder	●	●	●	●
	Plastic horn antenna	●	–	–	●
	Metal horn antenna	–	●	●	-
	Metal encapsulated lens antenna	–	–	–	●
	Parabolic antenna	–	●	●	–
Suitability for industry-specific applications	Aggregates and mining industry	●	●	●	●
	Chemical	●	●	●	●
	Power generation	–	●	●	●
	Foodstuffs	●	●	●	●
	Metal production	●	●	●	●
	Offshore	–	●	●	–
	Paper	●	●	●	●
	Petrochemical	–	●	●	●
	Pharmaceutical	–	●	●	●
	Environment and recycling industry	●	●	●	●
	Cement industry	●	●	●	●

5 Housing overview

Plastic PBT		
Protection rating	IP 66/IP 67	IP 66/IP 67
Version	Single chamber	Double chamber
Application area	Industrial environment	Industrial environment

Aluminium		
Protection rating	IP 66/IP 67, IP 66/IP 68 (1 bar)	IP 66/IP 67, IP 66/IP 68 (1 bar)
Version	Single chamber	Double chamber
Application area	Industrial environment with increased mechanical stress	Industrial environment with increased mechanical stress

Stainless steel 316L			
Protection rating	IP 66/IP 67	IP 66/IP 67, IP 66/IP 68 (1 bar)	IP 66/IP 67, IP 66/IP 68 (1 bar)
Version	Single chamber, electropolished	Single chamber, precision casting	Double chamber, precision casting
Application area	Aggressive environment, food processing, pharmaceutical	Aggressive environment, extreme mechanical stress	Aggressive environment, extreme mechanical stress

6 Mounting

Mounting examples

The following illustrations show mounting examples and measurement setups.

Plastic granules

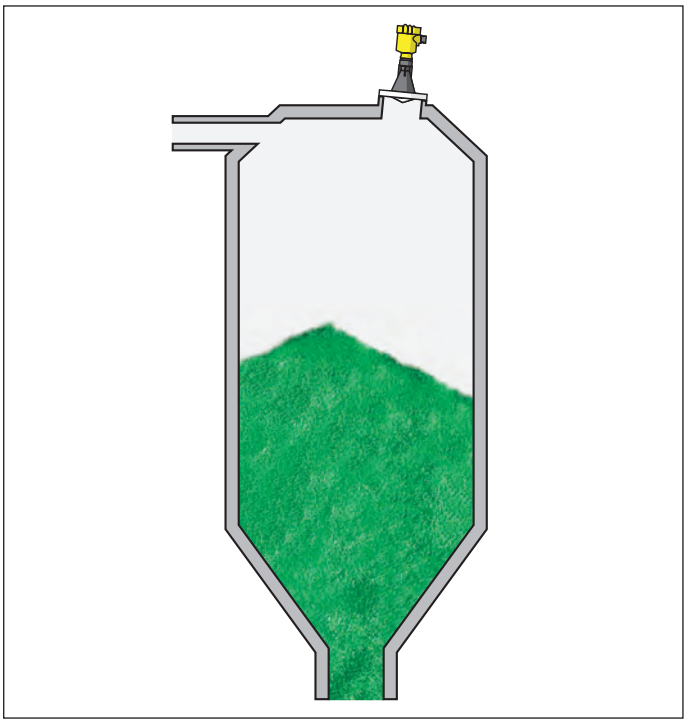

Fig. 16: Level measurement in a plastic granules silo with VEGAPULS 67

Plastic granules and powder are often stored in high, narrow silos which are filled pneumatically. Typical conditions are filling noise, material cones and poor reflective properties.

The high sensitivity of the VEGAPULS 67 sensor guarantees ample performance reserves for reliable level measurement even with widely varying product surface geometries.

Fine lime

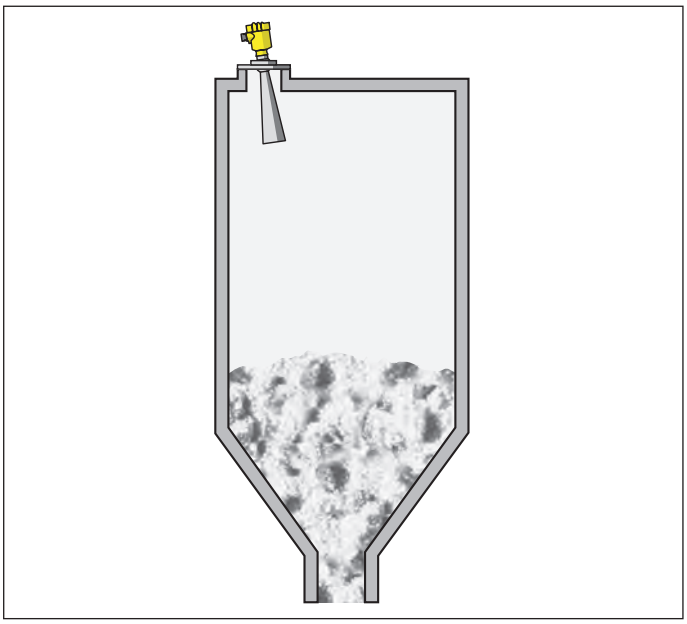

Fig. 17: Level measurement in a lime silo with VEGAPULS SR 68

Due to the extreme dust generation during the filling of powders, a non-contact measurement with ultrasonics is virtually impossible. The VEGAPULS SR 68 is the ideal solution since microwaves are unaffected by dust generation and the filling stream.

The VEGAPULS SR 68 radar sensor is the ideal measuring instrument for this application. With a swivelling holder it can be optimally aligned to the product surface.

Clinker silo

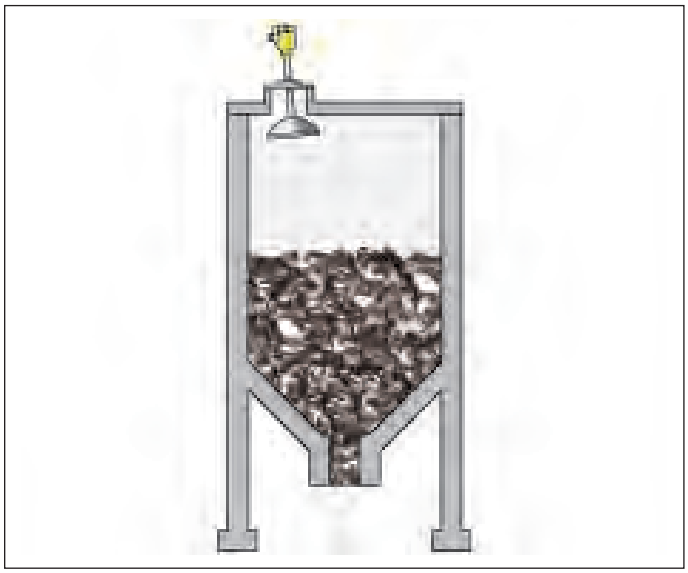

Fig. 18: Level measurement in a clinker silo with VEGAPULS 68

Clinker is an additive for concrete and is stored in large silos or bunkers. Its abrasive properties as well as extreme dust generation during filling place heavy demands on the level measurement.

The VEGAPULS 68 sensor is the optimum solution for level measurement. Its parabolic antenna powerfully focuses the microwaves, thus generating a strong useful signal. Interference from struts or installations is excluded.

Cement silo

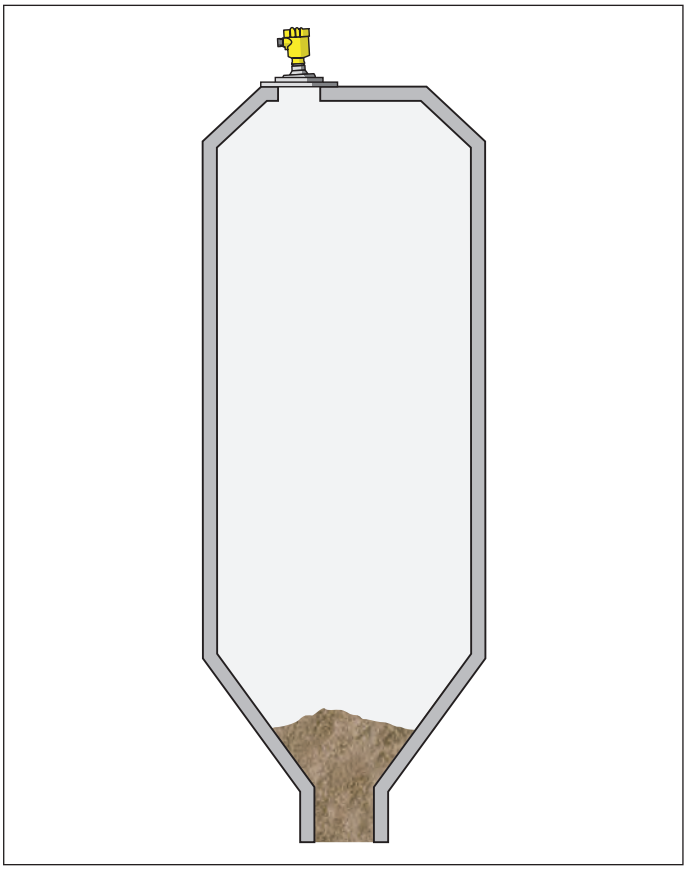

Fig. 19: Level measurement in a cement silo with VEGAPULS 69

Cement is stored in high and very slender silos. The abrasive properties as well as the extreme dust generation during filling make high demand on the level measurement.

The VEGAPULS 69 sensor is the optimum solution for level measurement. The high emitting frequency and its antenna powerfully focus the microwaves, thus generating a strong useful signal. Interference from struts or installations is excluded.

7 Electronics - 4 … 20 mA/HART - two-wire

Configuration of the electronics

The plug-in electronics is mounted in the electronics compartment of the instrument and can be exchanged by the user when servicing is required. The electronics is completely encapsulated to protect against vibration and moisture.

The terminals for voltage supply as well as the contact pins with I^2C interface for parameter adjustment are located on the upper side of the electronics. In the double-chamber housing, the terminals are located in the separate terminal compartment.

Voltage supply

Power supply and current signal are carried on the same two-wire cable. The operating voltage can differ depending on the instrument version.

You can find the data of the voltage supply in chapter "*Technical data*" in the operating instructions manual of the respective instrument.

Provide a reliable separation between the supply circuit and the mains circuits according to DIN EN 61140 VDE 0140-1.

Specifications of the voltage supply:

- Operating voltage
  - 9.6 … 35 V DC
  - 12 … 35 V DC
- Permissible residual ripple - Non-Ex, Ex-ia instrument
  - for 9.6 V< U_N < 14 V: ≤ 0.7 V_{eff} (16 … 400 Hz)
  - for 18 V< U_N < 35 V: ≤ 1.0 V_{eff} (16 … 400 Hz)

Keep in mind the following additional factors that influence the operating voltage:

- Lower output voltage of the power supply unit under nominal load (e.g. with a sensor current of 20.5 mA or 22 mA in case of fault)
- Influence of additional instruments in the circuit (see load values in chapter "*Technical data*" of the operating instructions of the respective instrument)

Connection cable

The instrument is connected with standard two-wire cable without screen. If electromagnetic interference is expected which is above the test values of EN 61326-1 for industrial areas, screened cable should be used.

We generally recommend the use of screened cable for HART multidrop mode.

Cable screening and grounding

If screened cable is required, we recommend connecting the cable screen on both ends to ground potential. In the sensor, the screen must be connected directly to the internal ground terminal. The ground terminal on the outside of the housing must be connected to the ground potential (low impedance).

Connection

Single chamber housing

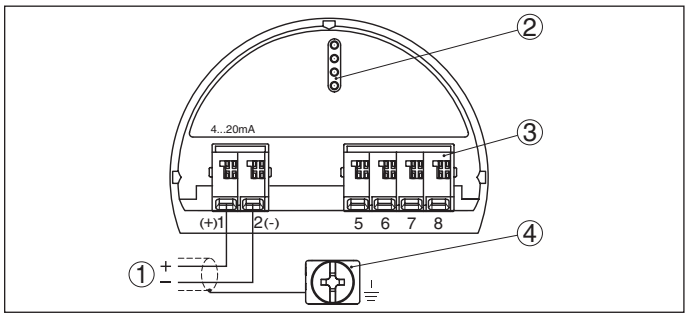

Fig. 20: Electronics and terminal compartment, single chamber housing

1 *Voltage supply/Signal output*
2 *For display and adjustment module or interface adapter*
3 *For external display and adjustment unit*
4 *Ground terminal for connection of the cable screen*

Double chamber housing

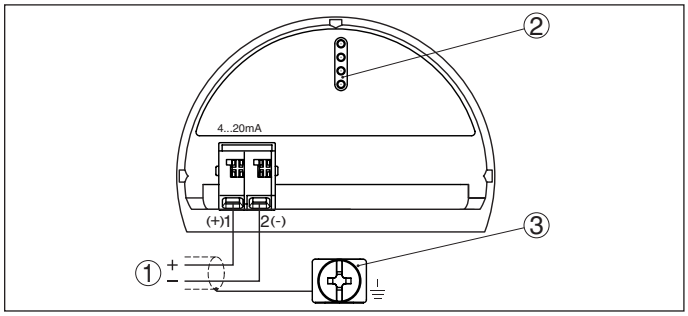

Fig. 21: Terminal compartment, double chamber housing

1 *Voltage supply/Signal output*
2 *For display and adjustment module or interface adapter*
3 *Ground terminal for connection of the cable screen*

8 Electronics - 4 … 20 mA/HART - four-wire

Configuration of the electronics

The plug-in electronics is mounted in the electronics compartment of the instrument and can be exchanged by the user when servicing is required. The electronics is completely encapsulated to protect against vibration and moisture.

The contact pins with I^2C interface for parameter adjustment are located on the upper side of the electronics. The terminals for the power supply are located in the separate connection compartment.

Voltage supply

If a reliable separation is required, the power supply and the current output are transmitted over separate two-wire connection cables.

- Operating voltage with version for low voltage
  - 9.6 … 48 V DC, 20 … 42 V AC, 50/60 Hz
- Operating voltage with version for mains voltage
  - 90 … 253 V AC, 50/60 Hz

Connection cable

The 4 … 20 mA current output is connected with standard two-wire cable without screen. If electromagnetic interference is expected which is above the test values of EN 61326 for industrial areas, screened cable should be used.

For power supply, an approved installation cable with PE conductor is required.

Cable screening and grounding

If screened cable is required, we recommend connecting the cable screen on both ends to ground potential. In the sensor, the screen must be connected directly to the internal ground terminal. The ground terminal on the outside of the housing must be connected to the ground potential (low impedance).

Connection, double chamber housing

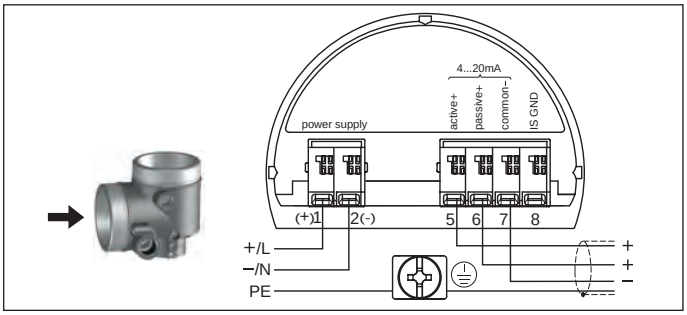

Fig. 22: Terminal compartment, double chamber housing

1 Voltage supply
2 4 … 20 mA signal output active
3 4 … 20 mA signal output passive

Terminal	Function	Polarity
1	Voltage supply	+/L
2	Voltage supply	-/N
5	4 … 20 mA output (active)	+
6	4 … 20 mA output (passive)	+
7	Mass - output	-
8	Functional ground with installation according to CSA	

9 Electronics - Profibus PA

Configuration of the electronics

The plug-in electronics is mounted in the electronics compartment of the instrument and can be exchanged by the user when servicing is required. The electronics is completely encapsulated to protect against vibration and moisture.

The terminals for voltage supply as well as the plug with I^2C interface for parameter adjustment are located on the upper side of the electronics. In the double-chamber housing, these connection elements are located in the separate terminal compartment.

Voltage supply

The voltage supply is provided by a Profibus DP /PA segment coupler.

Specifications of the voltage supply:

- Operating voltage
  - 9 … 32 V DC
- Max. number of sensors per DP/PA segment coupler
  - 32

Connection cable

Connection is carried out with screened cable according to Profibus specification.

Make sure that the entire installation is carried out according to the Profibus specification. In particular, make sure that the bus is terminated with suitable terminating resistors.

Cable screening and grounding

In systems with potential equalisation, connect the cable screen directly to ground potential at the power supply unit, in the connection box and at the sensor. The screen in the sensor must be connected directly to the internal ground terminal. The ground terminal outside on the housing must be connected to the potential equalisation (low impedance).

In systems without potential equalisation, connect the cable screen directly to ground potential on the power supply unit and the sensor. In the connection box or T-distributor, the screen of the short stub to the sensor may not be connected to ground potential or to another cable screen.

Connection

Single chamber housing

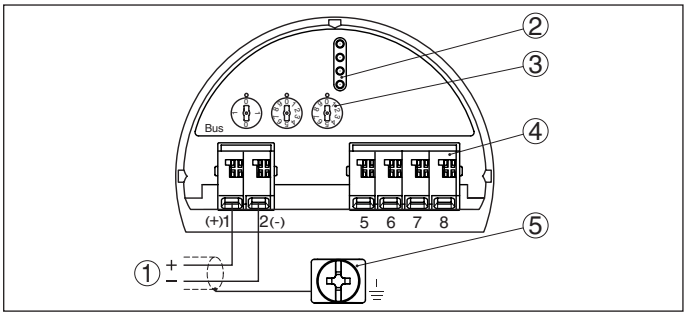

Fig. 23: Electronics and terminal compartment, single chamber housing

1 *Voltage supply/Signal output*
2 *For display and adjustment module or interface adapter*
3 *Selection switch for bus address*
4 *For external display and adjustment unit*
5 *Ground terminal for connection of the cable screen*

Connection, double chamber housing

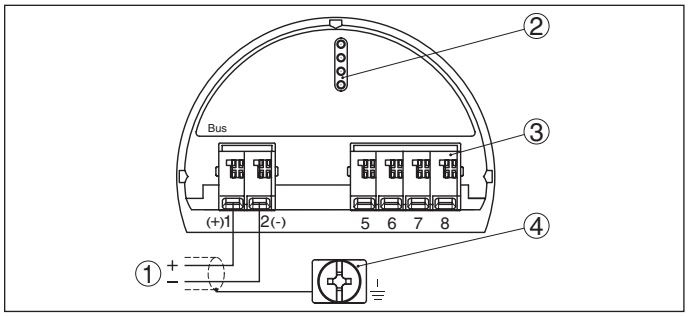

Fig. 24: Terminal compartment, double chamber housing

1 *Voltage supply, signal output*
2 *For display and adjustment module or interface adapter*
3 *For external display and adjustment unit*
4 *Ground terminal for connection of the cable screen*

10 Electronics - Foundation Fieldbus

Configuration of the electronics

The plug-in electronics is mounted in the electronics compartment of the instrument and can be exchanged by the user when servicing is required. The electronics is completely encapsulated to protect against vibration and moisture.

The terminals for voltage supply as well as the plug with I^2C interface for parameter adjustment are located on the upper side of the electronics. In the double-chamber housing, these connection elements are located in the separate terminal compartment.

Voltage supply

Power supply via the H1 Fieldbus cable.

Specifications of the voltage supply:

- Operating voltage
  - 9 … 32 V DC
- max. number of sensors
  - 32

Connection cable

Connection is carried out with screened cable according to Fieldbus specification.

Make sure that the entire installation is carried out according to the Fieldbus specification. In particular, make sure that the bus is terminated with suitable terminating resistors.

Cable screening and grounding

In systems with potential equalisation, connect the cable screen directly to ground potential at the power supply unit, in the connection box and at the sensor. The screen in the sensor must be connected directly to the internal ground terminal. The ground terminal outside on the housing must be connected to the potential equalisation (low impedance).

In systems without potential equalisation, connect the cable screen directly to ground potential on the power supply unit and the sensor. In the connection box or T-distributor, the screen of the short stub to the sensor may not be connected to ground potential or to another cable screen.

Connection

Single chamber housing

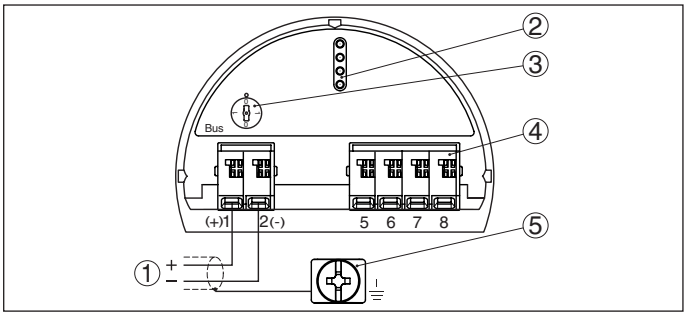

Fig. 25: Electronics and terminal compartment, single chamber housing

1 *Voltage supply/Signal output*
2 *Contact pins for the display and adjustment module or interface adapter*
3 *Selection switch for bus address*
4 *For external display and adjustment unit*
5 *Ground terminal for connection of the cable screen*

Connection, double chamber housing

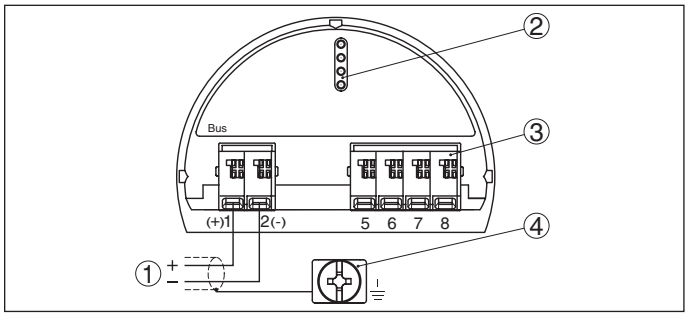

Fig. 26: Terminal compartment, double chamber housing

1 *Voltage supply, signal output*
2 *For display and adjustment module or interface adapter*
3 *For external display and adjustment unit*
4 *Ground terminal for connection of the cable screen*

11 Electronics - Modbus, Levelmaster protocol

Configuration of the electronics

The plug-in electronics is mounted in the electronics compartment of the instrument and can be exchanged by the user when servicing is required. The electronics is completely encapsulated to protect against vibration and moisture.

The contact pins with I^2C interface for parameter adjustment are located on the upper side of the electronics. The terminals for the power supply are located in the separate connection compartment.

Voltage supply

Power supply via the Modbus host (RTU)

- Operating voltage
  - 8 … 30 V DC
- max. number of sensors
  - 32

Connection cable

The instrument is connected with standard two-wire, twisted cable suitable for RS 485. If electromagnetic interference is expected which is above the test values of EN 61326 for industrial areas, screened cable should be used.

For power supply, a separate two-wire cable is required.

Make sure that the entire installation is carried out according to the Fieldbus specification. In particular, make sure that the bus is terminated with suitable terminating resistors.

Cable screening and grounding

In systems with potential equalisation, connect the cable screen directly to ground potential at the power supply unit, in the connection box and at the sensor. The screen in the sensor must be connected directly to the internal ground terminal. The ground terminal outside on the housing must be connected to the potential equalisation (low impedance).

In systems without potential equalisation, connect the cable screen directly to ground potential on the power supply unit and the sensor. In the connection box or T-distributor, the screen of the short stub to the sensor may not be connected to ground potential or to another cable screen.

Connection

Double chamber housing

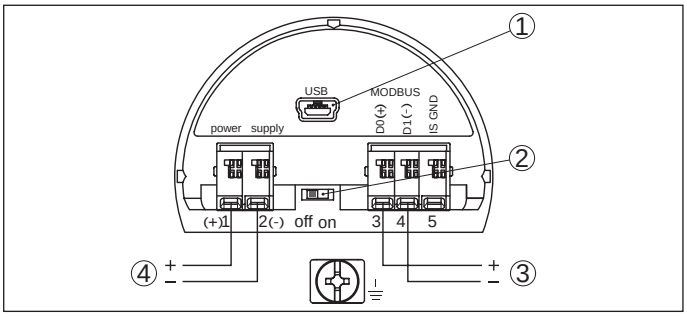

Fig. 27: Terminal compartment

1 *USB interface*
2 *Slide switch for integrated termination resistor (120 Ω)*
3 *Voltage supply*
4 *Modbus signal*

12 Adjustment

12.1 Adjustment directly at the measuring point

Via the display and adjustment module through keys
The plug-in display and adjustment module is used for measured value indication, adjustment and diagnosis. It is equipped with an illuminated full dot matrix as well as four keys for adjustment.

Fig. 28: Display and adjustment module with single chamber housing

Via the display and adjustment module through magnetic pen
With the Bluetooth version of the display and adjustment module, the sensor can also be adjusted with the magnetic pen. This is done right through the closed lid (with inspection window) of the sensor housing.

Fig. 29: Display and adjustment module - with adjustment via magnetic pen

Via a PC with PACTware/DTM
The interface converter VEGACONNECT is required for connection of the PC. The converter is placed on the sensor instead of the display and adjustment module and connected to the USB interface of the PC.

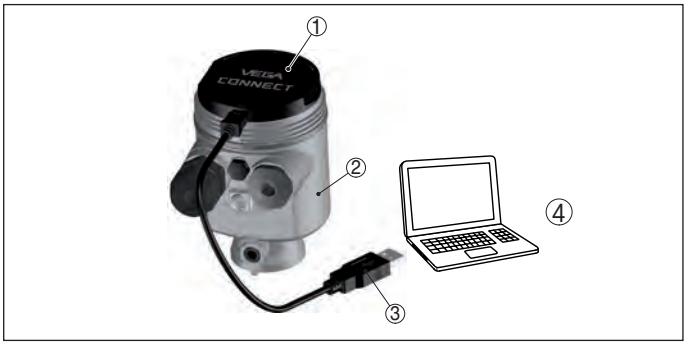

Fig. 30: Connection of the PC via VEGACONNECT and USB

1 *VEGACONNECT*
2 *Sensor*
3 *USB cable to the PC*
4 *PC with PACTware/DTM*

PACTware is an adjustment software for configuration, parameter adjustment, documentation and diagnosis of field devices. The corresponding device drivers are called DTMs.

12.2 Operation in the measurement loop environment - wireless via Bluetooth

Via a smartphone/tablet
The display and adjustment module with integrated Bluetooth functionality allows wireless connection to smartphones/tablets with iOS or Android operating system. The adjustment is carried out via the VEGA Tools app from the Apple App Store or Google Play Store.

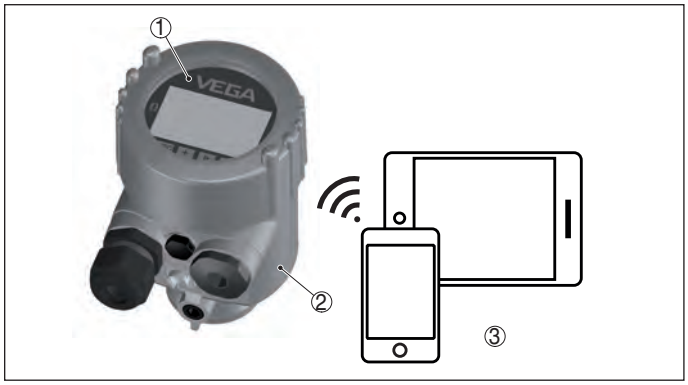

Fig. 31: Wireless connection to smartphones/tables

1 *Display and adjustment module*
2 *Sensor*
3 *Smartphone/Tablet*

Via a PC with PACTware/DTM
The wireless connection from the PC to the sensor is carried out via the Bluetooth USB adapter and a display and adjustment module with integrated Bluetooth function. The adjustment is carried out via the PC with PACtware/DTM.

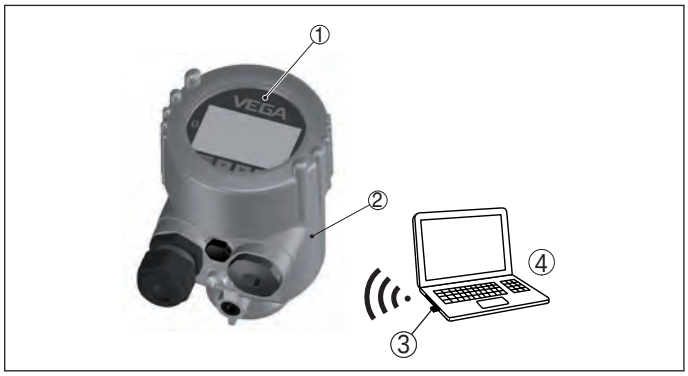

Fig. 32: Connection of the PC via Bluetooth USB adapter

1 *Display and adjustment module*
2 *Sensor*
3 *Bluetooth USB adapter*
4 *PC with PACTware/DTM*

12.3 Adjustment carried out at position remote from the measuring point - wired

Via external display and adjustment units
For this, the external display and adjustment units VEGADIS 81 and 82 are available. The adjustment is carried out via the keys of the built-in display and adjustment module.

The VEGADIS 81 is mounted at a distance of 50 m from the sensor and directly to the sensor electronics. VEGADIS 82 is looped directly into the signal cable at any point.

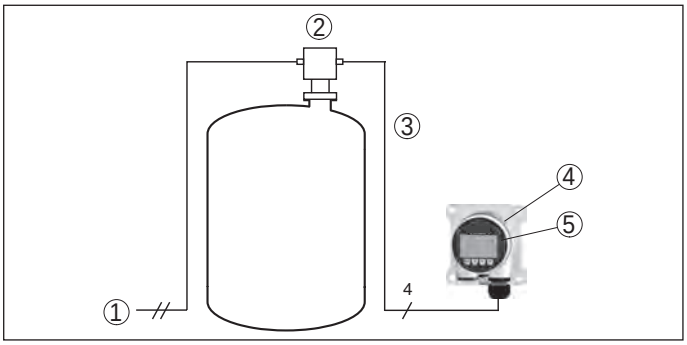

Fig. 33: Connection of VEGADIS 81 to the sensor

1 *Voltage supply/Signal output sensor*
2 *Sensor*
3 *Connection cable sensor - external display and adjustment unit*
4 *External display and adjustment unit*
5 *Display and adjustment module*

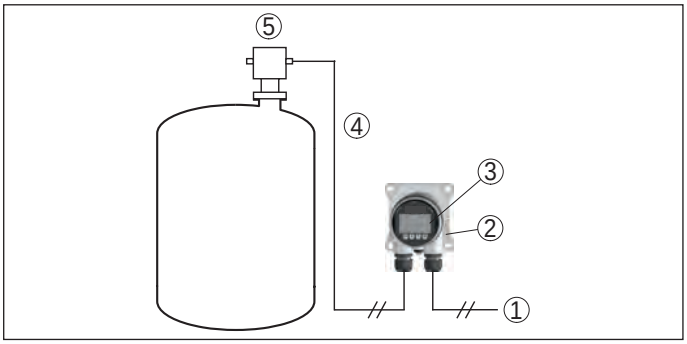

Fig. 34: Connection of VEGADIS 82 to the sensor

1 *Voltage supply/Signal output sensor*
2 *External display and adjustment unit*
3 *Display and adjustment module*
4 *4 … 20 mA/HART signal cable*
5 *Sensor*

Via a PC with PACTware/DTM
The sensor adjustment is carried out via a PC with PACTware/DTM.

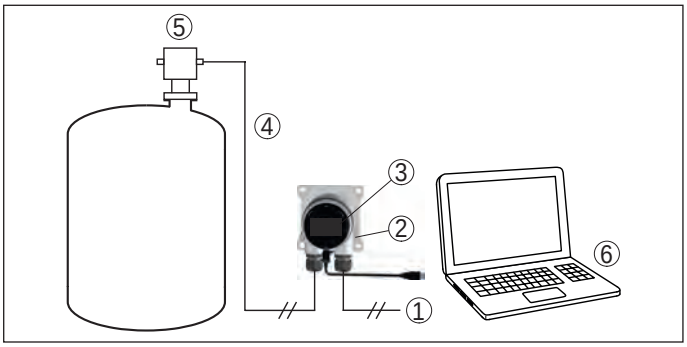

Fig. 35: Connection of VEGADIS 82 to the sensor, adjustment via PC with PACTware

1 *Voltage supply/Signal output sensor*
2 *External display and adjustment unit*
3 *VEGACONNECT*
4 *4 … 20 mA/HART signal cable*
5 *Sensor*
6 *PC with PACTware/DTM*

12.4 Adjustment carried out at position remote from the measuring point - wireless through mobile network

As an option, the radio module PLICSMOBILE can be mounted into a plics® sensor with double chamber housing. It is used for transmission of measured values and for remote parameter adjustment of the sensor.

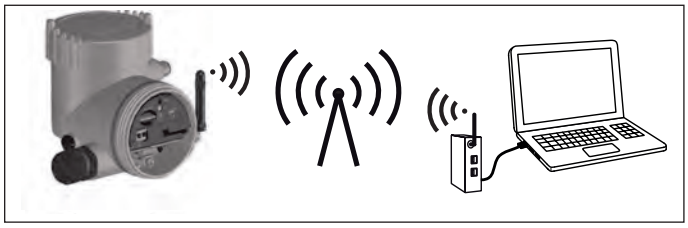

Fig. 36: Transmission of measured values and remote parameter adjustment of the sensor via mobile phone network.

12.5 Alternative adjustment programs

DD adjustment programs
Device descriptions as Enhanced Device Description (EDD) are available for DD adjustment programs such as, for example, AMS™ and PDM.

The files can be downloaded at www.vega.com/downloads under "*Software*".

Field Communicator 375, 475
Device descriptions for the instrument are available as EDD for parameter adjustment with the Field Communicator 375 or 475.

Integrating the EDD into the Field Communicator 375 or 475 requires the "Easy Upgrade Utility" software, which is available from the manufacturer. This software is updated via the Internet and new EDDs are automatically accepted into the device catalogue of this software after they are released by the manufacturer. They can then be transferred to a Field Communicator.

13 Dimensions

Plastic housing

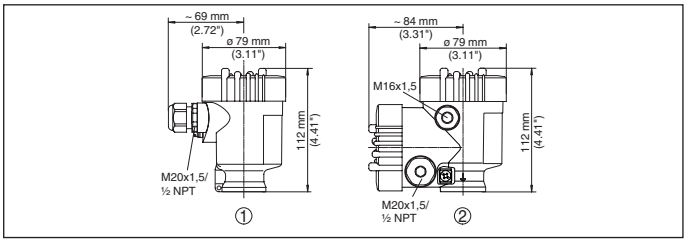

1 *Single chamber housing*
2 *Double chamber housing*

Aluminium housing

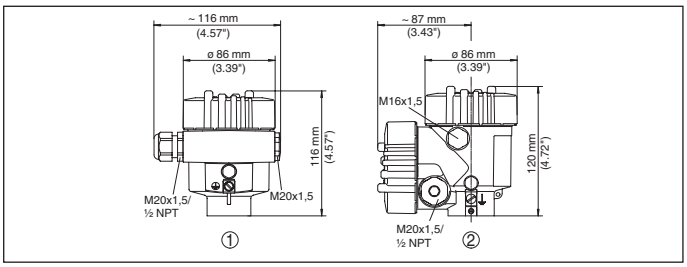

1 *Single chamber housing*
2 *Double chamber housing*

Stainless steel housing

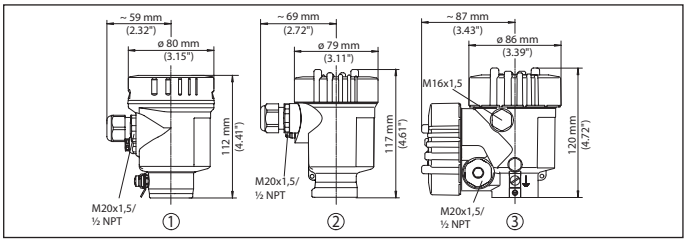

1 *Single chamber housing, electropolished*
2 *Single chamber housing, precision casting*
2 *Double chamber housing, precision casting*

VEGAPULS 67

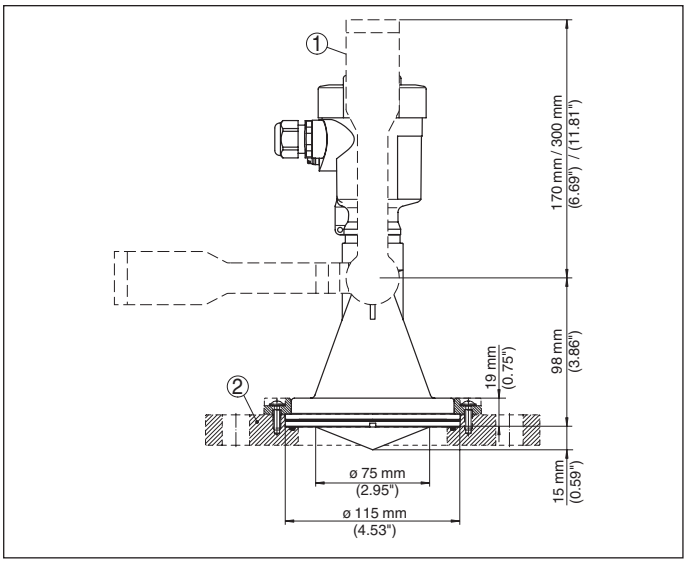

1 *Mounting strap*
2 *Adapter flange*

VEGAPULS SR 68

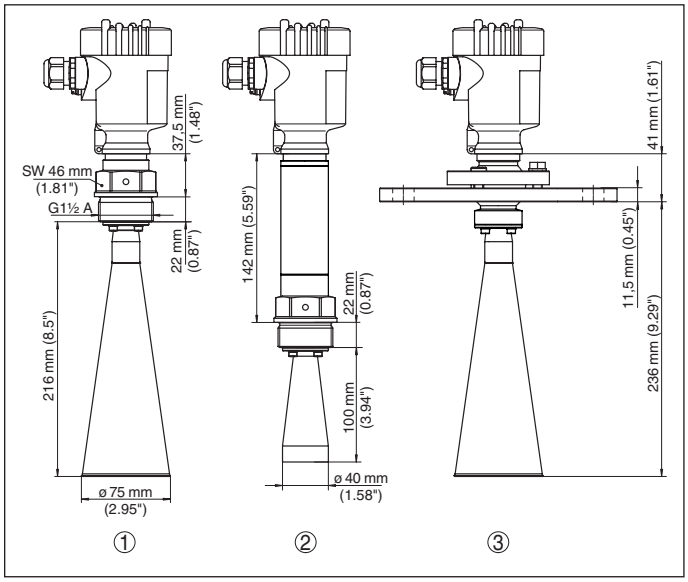

1 *Threaded version with horn antenna*
2 *Threaded version with horn antenna and temperature adapter*
3 *Version with horn antenna and swivelling holder*

VEGAPULS 68

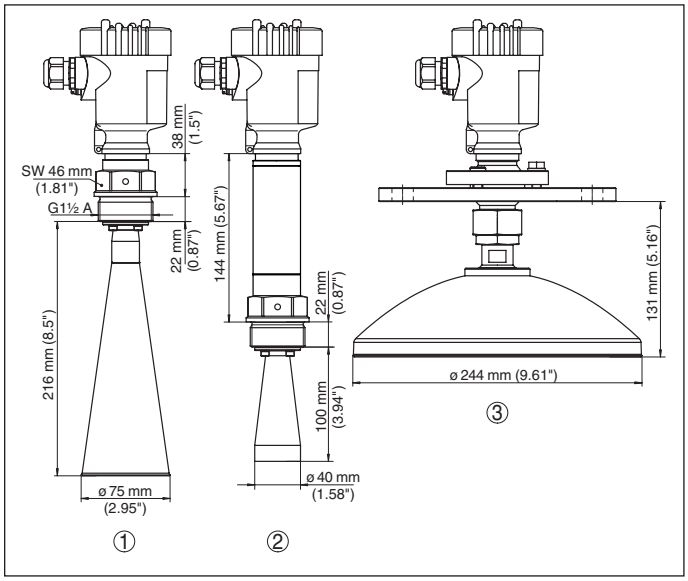

1 *Threaded version with horn antenna*
2 *Threaded version with horn antenna and temperature adapter*
3 *Version with parabolic antenna and swivelling holder*

29427-EN-180201

VEGAPULS 69

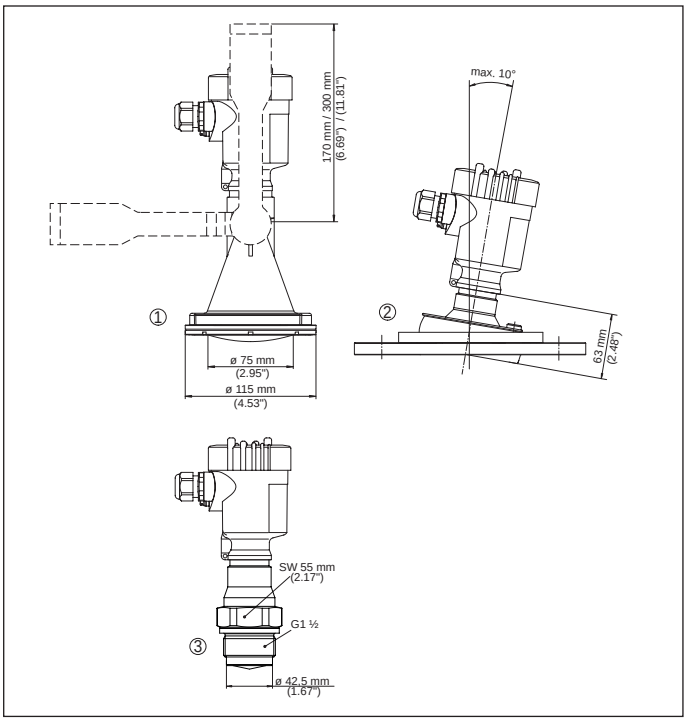

1 Plastic horn antenna with mounting strap
2 Metal jacketed lens antenna with swivelling holder

The listed drawings represent only an excerpt of the available process fittings. You can find more drawings at www.vega.com/downloads under "*Drawings*".

All statements concerning scope of delivery, application, practical use and operating conditions of the sensors and processing systems correspond to the information available at the time of printing.
Subject to change without prior notice

© VEGA Grieshaber KG, Schiltach/Germany 2018

VEGA Grieshaber KG
Am Hohenstein 113
77761 Schiltach
Germany

Phone +49 7836 50-0
Fax +49 7836 50-201
E-mail: info.de@vega.com
www.vega.com

29427-EN-180201